由 Autodesk 教育版产品制作

REV.	ECN NO:	APPD
A		

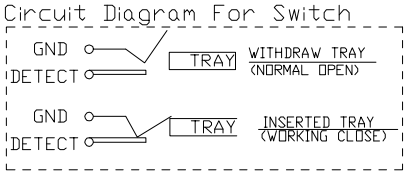

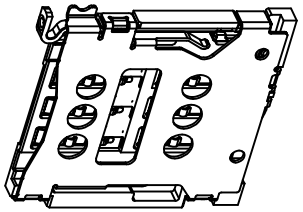

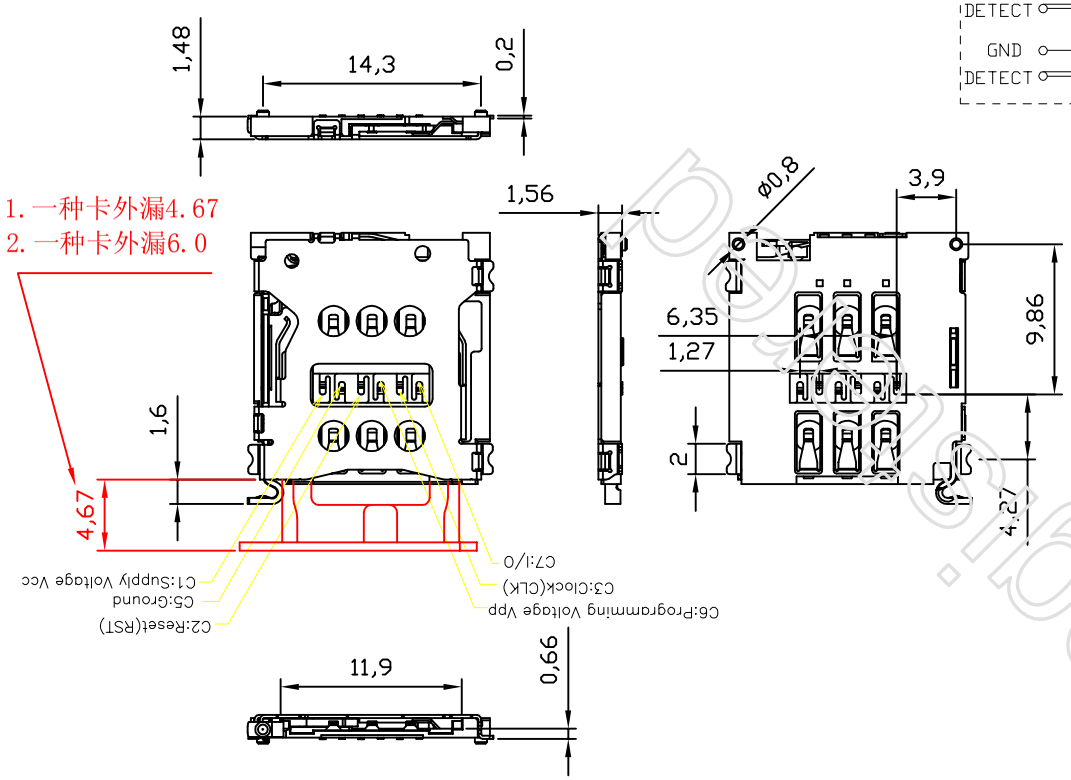

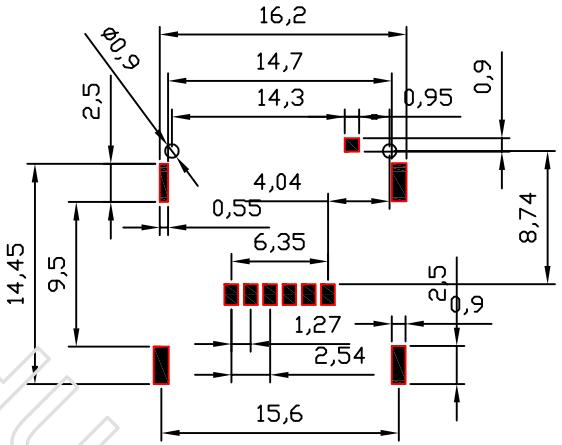

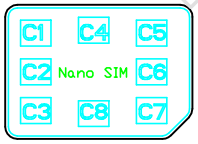

RECOMMENDED
PCB PATTERN LAYOUT(TOP VIEW)
TOLERANCE: ±0.05

NOTES:

1. ELECTRICAL CHARACTERISTICS:
   1-1. CURRENT RATING: 1 Amp/PIN. MAX.
   1-2. VOLTAGE: 30V DC. MAX.
   1-3. LOW LEVEL CONTACT RESISTANCE: 30 mOhms MAX. INITIALLY.
   1-4. DIELECTRIC WITHSTANDING VOLTAGE: 500V AC MIN. FOR 1 MINUTE.
   1-5. INSULATION RESISTANCE: 100MOhms MIN.(DC 500V FOR 1 MINUTE)
2. MECHANICAL CHARACTERISTICS:
   2-1. DURABILITY: 1500 CYCLES.
   2-2. OPERATING FORCE (INSERTING & WITHDRAWAL): 1N-10N.
3. ENVIRONMENTAL CHARACTERISTICS:
   3-1. OPERATING TEMP. RANGE: -25°C TO 85°C. [INCLUDING TERMINAL TEMP. RISE]
   3-2. STORAGE TEMP.: -40°C TO 85°C.
4. QUANTITY OF PRODUCTS: 1000PCS/REEL.
5. PLEASE CONTACT GOSTAR SALES REPRESENTATIVE TO VERIFY PRODUCT DETAILS.

DRAWING TITLE:	?????????????		
MATERIAL: ⚠ / FINISH: ⚠			
UNLESS OTHERWISE SPECIFED TOLERANCES X +/-0.35 X. +/-5° X.X +/-0.25 X.X. +/-3° X.XX +/-0.15 X.XX. +/-/° X.XXX +/-0.05 UNITS: mm	PART NO:	PART NAME.: Customer for 1.5H Nano SIM Card CONN	
	APPROVED:	DWG NO.: XNT-NANO-0605-IP6-2	
	CHECKED:		
	DESIGN:	SCALE / SHEET 1/1 REV A	

由 Autodesk 教育版产品制作
由 Autodesk 教育版产品制作
由 Autodesk 教育版产品制作